Peterbilt DPF emulator wiring diagram

Correct and error-free operation of the DPF emulator is guaranteed only with a good working MAP sensor and oxidation catalyst temperature sensor.

Before connecting the emulator, **turn on the ignition** and measure the voltage with a multimeter relative to the ground to determine the polarity of sensors (do **NOT disconnect** the sensors, do **NOT start** the engine):

1. Temperature sensors: the signal pin has a PLUS voltage, return pin has a

NEGATIVE voltage.

2. Differential pressure sensor: the signal pin has 0.5–1.0V, the GND pin has 0V, and the power pin is 5V. There are two different versions of pressure sensor: with 3 pins and with 4. Please, refer to the images below.

3. MAP sensor (another name IMP): turn on the ignition and measure the voltage with a multimeter. The voltage on the signal wire should be 0.9-1.7 V.

Important: Make sure to avoid wiring to wrong pins as it may damage the device.

If the DTCs faults still persist after installing the emulator, delete all error codes with a code reader OR make a test drive for 10-15 minutes, then disconnect a battery for 5 minutes. Restart the ignition.

After the emulator operates properly, remove entrails of the DPF filter. For proper operation of the emulator, the temperature sensor must be in the exhaust gas flow, and not away from them.

To test emulator, get external +5V power source and connect to emulator wires: red wire to +5, black to Ground, and measure the voltage between black (Ground) and yellow wires. It should be 0.69-0.73V. If the emulator is already connected to the truck, disconnect the yellow wire from the vehicle before measurement.

This emulator is intended for off-road use only.

Schematic for 4-pins differential pressure sensor

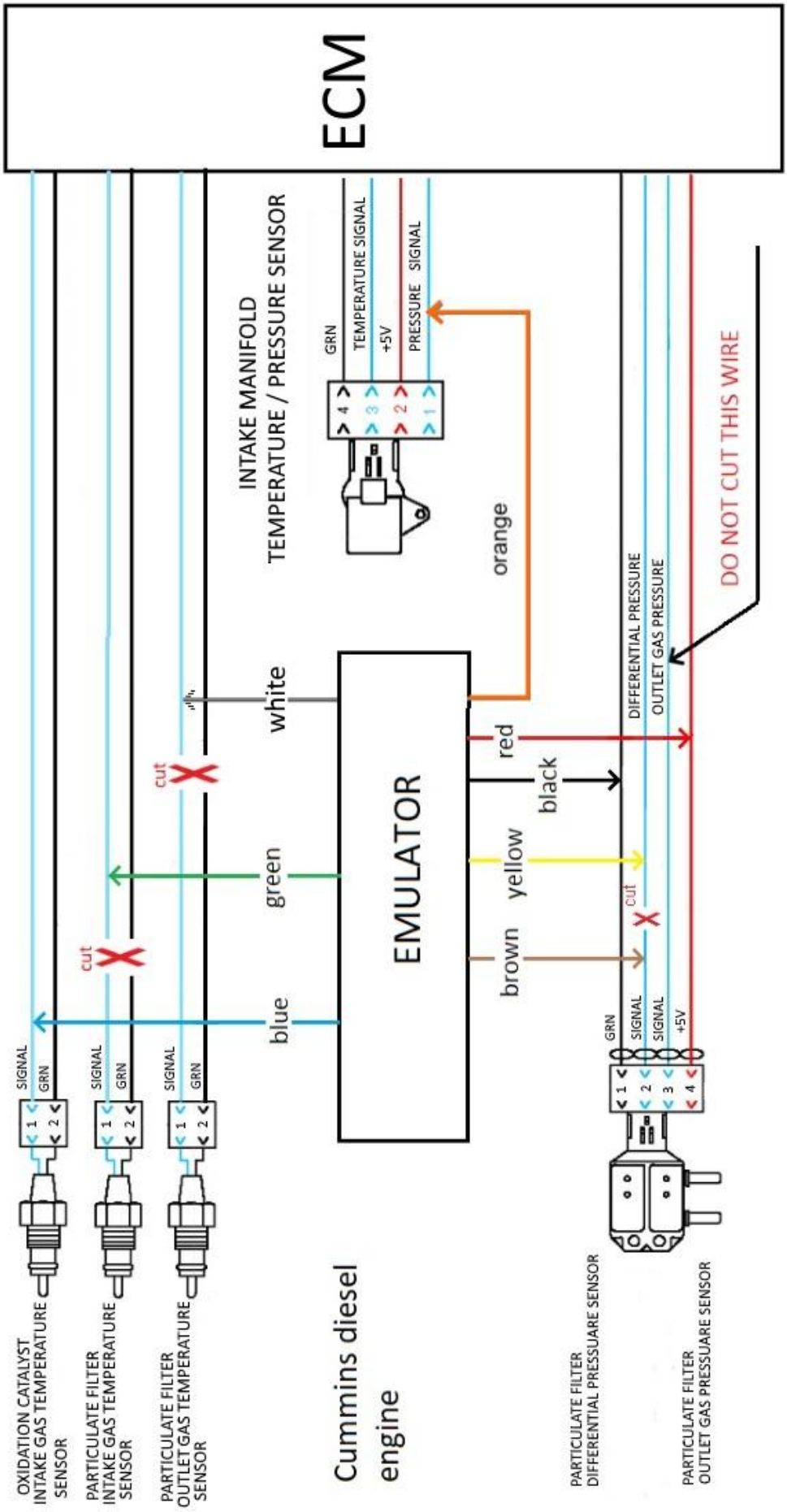
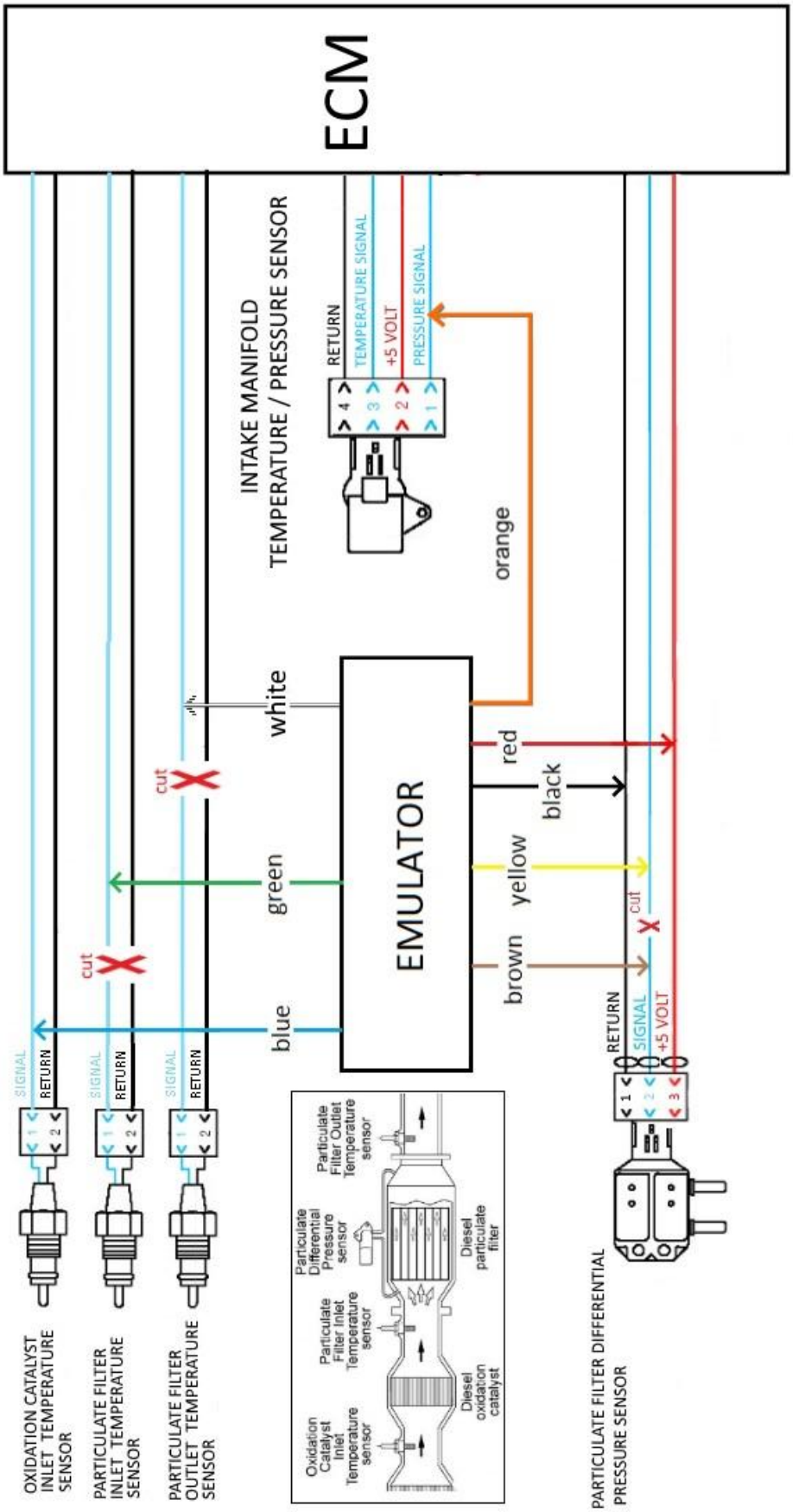
Schematic for 3-pins differential pressure sensor